HEARKEN® FLOW CONTROL

BROCHURE

WECHAT WEB

Welcome to HEARKEN

—— Actuators and Controls

Hearken Here We Can

The Trusted, Passionate and focused Partner in Valve Automation

At HEARKEN FLOW,The founding principle of Hearkenflow is simple: to Listen our customers needs first, to develop the innovative valve actuators solutions , to meet the unique needs of our customers, Along the way, To help our customers to solve the problems in Valve Automation. We are growing our brand in Pneumatic and Electric Actuators, Accessories..

Ex CE SIL IP68 IP 67 ISO 9001:2015

- Experienced team
- Large inventory
- Convenient consultation

WHY WE ARE DIFFERENT

We offer a complete valve automation solution by the applications experience and customization capabilites, with an experienced support team to guide you in selection, installation, and project support.In addition we maintain an extensive supply of product inventory on hand so that we can quickly fulfill orders and reduce wait times. Our sales and support staff are readily available and accessible so that customers get the answers they need quickly.

THE TARGET WE ARE PURSUING

High-quality — low cost — Reliable solution

- To built A strong Reputation in Providing Quality, Cost Effective , Reliable And Robust Performance Solutions for Valve Automation,
- Inclued Pneumatic Actuators, Electrically Actuators,Actuated Valves.

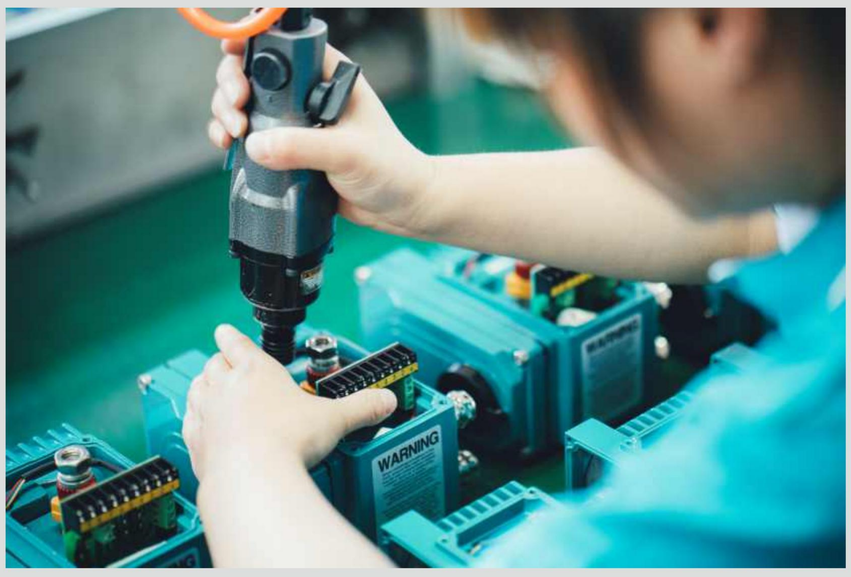

COMMITMENT TO QUALITY

At HEARKEN FLOW means performance, All products manufactured by HEARKEN FLOW are warranted against defects in material and workmanship for a period of 18months from the day of startup. Each of our products are tested at the factory. we are confident that our products meet or exceed all applicable standards before they ever leave our facility. We are an ISO 9001-2008 certified company. Our Valve Actuators Has Applied for SIL3 Certificate, ATEX Certificate ,CE,Explosion-proof Certificate, IP68 Weather proof etc....

Copyright owership belongs to HEARKEN® FLOW CONTROL shall not be reproduced,copied,or used in other ways without permission otherwise we will have the right to pursue legal responsibilities.

As we are continually developing our products,their design is subect to change without notice, Latest information is available on info@hearkenflow.com www.hearkenflow.com www.hfvalveactuator.com

Rev. April 01, 2021

HPA Series Pneumatic Actuator

—— Rack Pinion Design

Description

Pneumatic actuator is prelubricated and tested to a min one million operations Actuators are avvaliable double acting and spring return models,Its meet international ISO5211 standards for easy vale mounting and replacement Visual position indicator will monitor the open and closed position.

Standard Specification

- Movement：Standard adjustable 90°±%
- Lubrication：All moving parts are lubricated for life-long cycle
- Cycle Life：1,000,000 Operations
- Body：Hard anodized extruded Aluminium alloy
- Indicator：Open /Close Disc
- Travel Stops：External adjustable ±5% in both open/closed position
- Springs：High tensile spring sets of alloy steel
- Piston Shaft：Nickel plated alloy steel reduces friction
- Piston Guides：Self lubricating (Polypropylene + GF) Piston Seals Nitrile**
- Piston：Die casted aluminium dual piston
- End Caps：Polyester coated die cast aluminium

working Pressure

- Standard Temperature:-20~+80 Degree
- Low Temperature: -50~+80 Degree
- High Temperature: -15~+150

Testing For All Actuators

All actuators manufactured by HEARKEN are individually tested, Testing is carried out to check the leakage in both internal and external,The angle of rotation and Torque values.All bodies are stamped with year,month of production,size and serial number.

Range of Standard Accessories are Avaliable for Direct Mounting

1. Solenoid Valve
2. Limit Switchboxes
3. Electro-pneumatic Positioner
4. Declutchable Manual Override Gearbox
5. High Visibility Indicator

Interface Specification

a

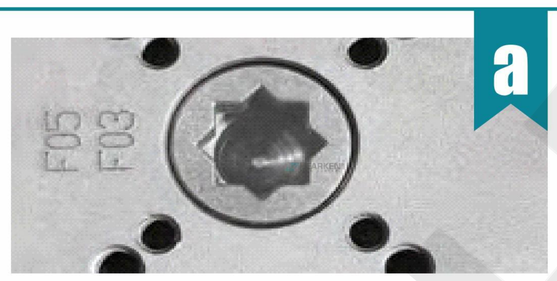

Drive and Flange to ISO5211 configuration for easy direct mount onto a valve or connection w ith standardized mounting hardw are.

b

The N AMU R Drive Pinion and NAMU R top mounting connection for direct installation of accessories such as Limit Sw itch and Positioner.

c

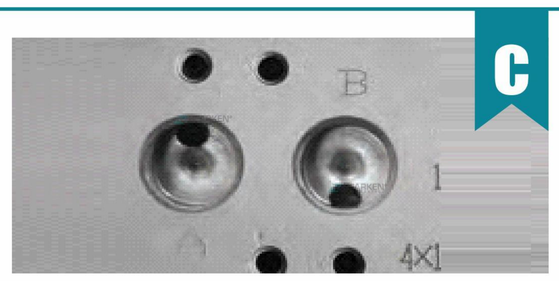

Air supply connection is designed in accordance w ith NAMU R Standard to install solenoid valve.

Bottom View Iso5211

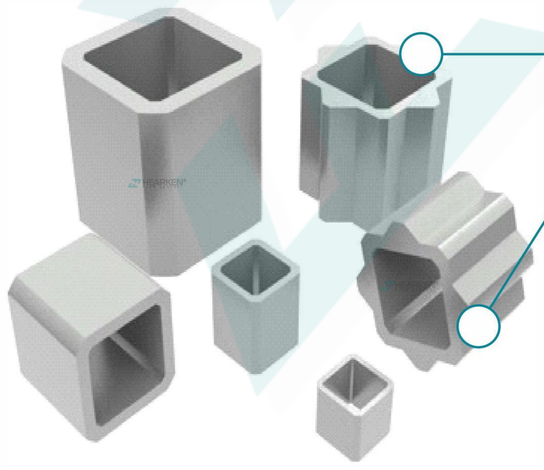

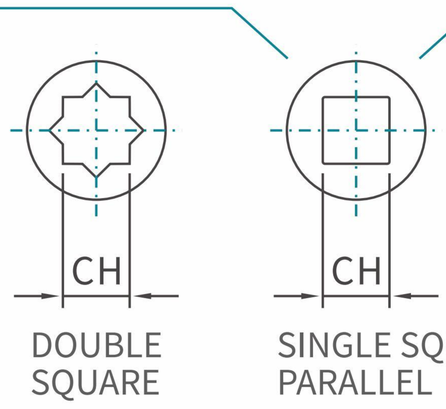

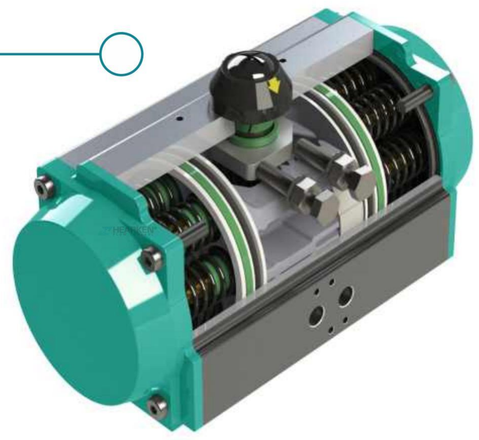

Copyright owership belongs to HEARKEN® FLOW CONTROL shall not be reproduced,copied,or used in other ways without permission otherwise we will have the right to pursue legal responsibilities.

As we are continually developing our products,their design is subect to change without notice, Latest information is available on info@hearkenflow.com

www.hearkenflow.com
www.hfvalveactuator.com

Rev. April 01, 2021

-Market Leading

HEARKEN® FLOW CONTROL

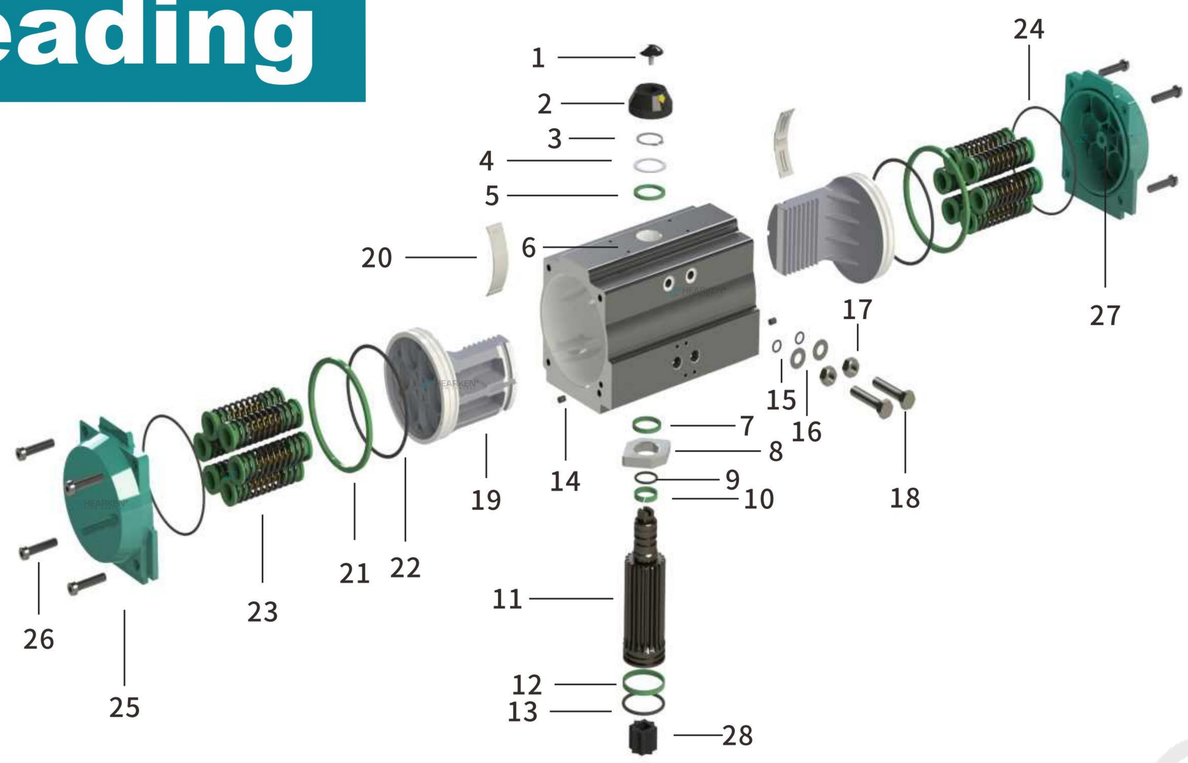

BROCHURE

- Square Adapter

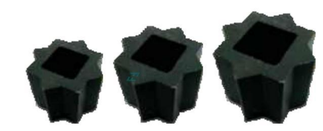

- Star Adapter

	Description	Material	ty
1	Indicator Screw	ABS	1
2	Position Indicator	ABS	1
3	Spring Clip	Stainless Steel 304	1
4	Metal Washer	Stainless Steel 304	1
5	OeWr asher	Engineering Plastic	1
6	Body	Extruded Aluminum Alloy	1
7	Inner Washer	Engineering Plastic/Hard Anodized	1
8	Travel Stop	AlloySteel	1
9	O-ring Pinoin Top	N B R (VITON or EPDM on reuest)	1
10	Bearing Pinoin Top	Engineering Plastic	1
11	Pinion	AlloySteel (Electroless Nickel Plated) /SS304 is Optional	1
12	Bearing	Engineering Plastic	1
13	Bearing Pinoin bottom	N B R (VITON or EPDM on reuest)	1

	Description	Material	ty
14	Hole Sealant	N B R (VITON or EPDM on reuest)	2
15	O-ring Adjust Screw	N B R (VITON or EPDM on reuest)	2
16	Washer Adjust Screw	Stainless Steel 304	2
17	N ut Adjust Screw	Stainless Steel 304	2
18	Adjust Screw	Stainless Steel 304	2
19	Piston	Die Cast Aluminum Alloy	2
20	Piston B earing	Engineering Plastic/Anodized	2
21	Bearing Piston	Engineering Plastic	2
22	O-ring Piston	N B R (VITON or EPDM on reuest)	2
23	Spring Group	Spring Steel	0~12
24	O-ring End Cap	N B R (VITON or EPDM on reuest)	2
25	End Cap	Cast Aluminum/Polyester Paint	2
26	Cap Screw	Stainless Steel 304	8
27	Stop Screw	Stainless Steel 304	2
28	Star Adaptor	Carobon Steel	1

Output Torque Of Double Acting Actuators (Unit:N.m)

Model	Air supply pressure(Unit:bar)									
	2	2.5	3	4	4.5	5	5.5	6	7	8
HPA032DA	3	4	5	6	7	8	8	9	11	12
HPA040DA	5	6	7	10	11	12	13	14	17	19
HPA052DA	8	10	12	16	18	20	22	24	28	32
HPA063DA	15	18	22	29	33	36	40	44	51	58
HPA075DA	20	25	30	40	45	50	55	60	70	80
HPA083DA	31	39	47	63	70	78	86	94	110	125
HPA092DA	45	56	68	90	102	113	124	135	158	181
HPA105DA	66	83	99	132	149	165	182	198	231	264
HPA125DA	100	125	150	200	226	251	276	301	351	401
HPA140DA	171	214	256	342	385	427	470	513	598	684
HPA160DA	266	332	399	532	598	665	731	798	931	1064
HPA190DA	426	532	638	851	958	1064	1170	1277	1490	1702
HPA210DA	532	665	798	1064	1197	1330	1463	1596	1862	2128
HPA240DA	769	932	1154	1539	1731	1924	2116	2308	2693	3078
HPA270DA	1170	1462	1754	2339	2632	2924	3216	3509	4094	4679
HPA300DA	1526	1908	2289	3052	3434	3815	4197	4578	5341	6104
HPA350DA	2285	2856	3427	4570	5141	5712	6283	6854	997	9139
HPA400DA	3256	4070	4884	6512	7326	8140	8954	9768	11396	13024

Air Consumption And weight Table

Model	DA Weight (Kgs)	SR Weight (Kgs)	Air Volume opening	Air Volume closing
DA/SR 032	0.7	–	0.04	0.05
DA/SR 040	1	1.1	0.08	0.11
DA/SR 052	1.4	1.5	0.12	0.16
DA/SR 063	2	2.1	0.21	0.23
DA/SR 075	2.7	2.9	0.3	0.34
DA/SR 083	3.1	3.6	0.43	0.47

Model	DA Weight (Kgs)	SR Weight (Kgs)	Air Volume opening	Air Volume closing
DA/SR 092	4.6	5.2	0.64	0.473
DA/SR 105	6.8	6.9	0.95	0.88
DA/SR 125	8.9	10.1	1.6	1.4
DA/SR 140	13	15	2.5	2.2
DA/SR 160	20	24	3.7	3.2
DA/SR 190	31	35	5.9	5.4

Model	DA Weight (Kgs)	SR Weight (Kgs)	Air Volume opening	Air Volume closing
DA/SR 210	47	55	7.5	7.5
DA/SR 240	67	80	11	9
DA/SR 270	97	118	17	14
DA/SR 300	110	130	23.8	29.7
DA/SR 350	186	234	35.1	46.3
DA/SR 400	289	360	52.6	56

Copyright owership belongs to HEARKEN® FLOW CONTROL shall not be reproduced,copied,or used in other ways without permission otherwise we will have the right to pursue legal responsibilities.

As we are continually developing our products,their design is subect to change without notice, Latest information is available on info@hearkenflow.com www.hearkenflow.com www.hfvalveactuator.com

Rev. April 01, 2021

Output Torque Of Spring Return Actuators (Unit:N.m)

Output torque of air springs																Spring's output	
Air pressure		2.5BAR		3BAR		4BAR		5BAR		6BAR		7BAR		8BAR			
Model	Spring Qty.	0°	90°	0°	90°	0°	90°	0°	90°	0°	90°	0°	90°	0°	90°	90°	0°
		Start	End	Start	End	Start	End	Start	End	Start	End	Start	End	Start	End	Start	End
HPA052SR	5	5.7	3.8	7.6	5.7	/	/	/	/	/	/	/	/	/	/	6.2	4.3
	6	4.9	2.5	6.9	4.5	10.9	8.5	/	/	/	/	/	/	/	/	7.4	5
	7	4	1.3	6	3.3	9.8	7.3	14	10.4	/	/	/	/	/	/	8.6	5.9
	8	/	/	5.2	2	9.2	6	13.2	9.1	17.2	14.1	/	/	/	/	9.9	6.7
	9	/	/	4.3	0.8	8.3	4.8	12.3	7.9	16.3	12.8	20.3	16.8	/	/	11.1	7.6
	10	/	/	/	/	7.4	3.6	11.5	6.7	15.5	11.6	19.5	15.6	/	/	12.4	8.5
	11	/	/	/	/	6.6	2.3	10.6	5.4	14.6	10.4	18.6	14.3	22.6	18.3	13.6	9.3
	12	/	/	/	/	/	/	9.7	4.2	13.8	9.1	17.8	12.2	21.8	17.1	14.8	10.2
HPA063SR	5	11.4	7.7	15	11.4	22.3	14.9	/	/	/	/	/	/	/	/	10.4	6.8
	6	10.1	5.7	13.6	9.3	20.9	16.6	28.3	23.9	/	/	/	/	/	/	12.5	8.2
	7	8.6	3.6	12.5	7.2	19.5	14.5	26.8	21.9	/	/	/	/	/	/	14.6	9.6
	8	/	/	10.9	5.1	18.2	12.4	25.5	19.8	32.8	27	40.1	34.3	/	/	16.7	10.9
	9	/	/	/	/	16.8	10.4	24.1	17.7	31.4	24.9	38.7	32.2	/	/	18.8	12.3
	10	/	/	/	/	1.4	8.2	22.8	15.6	30	22.8	37.3	30.1	44.7	37.4	20.9	13.7
	11	/	/	/	/	/	/	21.5	13.5	28.7	20.7	36	28	43.3	35.3	22.9	15
	12	/	/	/	/	/	/	20	11.4	27.3	18.6	34.6	25.9	41.9	33.3	25	16.4
HPA075SR	5	14.5	10.5	19.4	15.5	29.5	25.7	/	/	/	/	/	/	/	/	14.5	10.5
	6	12.4	7.6	17.3	12.6	27.4	22.7	37.5	32.8	/	/	/	/	/	/	17.4	12.7
	7	10.4	4.8	15.2	9.7	25.3	19.9	35.4	29.9	/	/	/	/	/	/	20.3	14.8
	8	/	/	31.1	6.8	23.1	16.9	33.3	27	43.2	37	53.3	47	/	/	23.2	16.9
	9	/	/	/	/	21	14.1	31.2	24.1	41.1	34.1	51.2	44.2	/	/	26.1	19
	10	/	/	/	/	19	11.1	28.8	21.2	39	31.2	49.1	41.2	59.1	51.2	29	21.1
	11	/	/	/	/	/	/	27	18.3	37	28.3	47	38.4	57	48.4	31.9	23.2
	12	/	/	/	/	/	/	24.9	15.4	34.9	25.4	44.9	35.4	54.9	45.4	34.7	25.3
HPA083SR	5	23.3	16.1	31.1	24	46.8	39.7	/	/	/	/	/	/	/	/	23	15.8
	6	20.1	11.5	28	19.3	43.7	35.1	59.4	50.7	/	/	/	/	/	/	27.6	19
	7	17	6.9	24.8	14.8	40.5	30.5	56.2	46.2	/	/	/	/	/	/	32.2	22.1
	8	/	/	21.7	10.1	37.4	25.8	53.1	41.5	68.8	57.2	84.5	72.9	/	/	36.8	23.2
	9	/	/	/	/	34.2	21.3	49.9	37	65.6	52.6	81.2	68.3	/	/	41.4	28.5
	10	/	/	/	/	31	16.6	46.7	32.3	62.4	48	78.1	63.7	93.8	79.3	46	31.6
	11	/	/	/	/	/	/	43.6	27.7	59.3	43.4	75	59.1	90.6	74.8	50.6	34.8
	12	/	/	/	/	/	/	40.4	23.2	56.1	38.9	71.7	54.5	87.4	70.2	55.2	38
HPA092SR	5	33.1	22	44.2	33.2	66.8	55.9	/	/	/	/	/	/	/	/	34.4	23.3
	6	28.4	15.2	39.6	26.4	62.2	49	84.8	71.6	/	/	/	/	/	/	41.2	28
	7	23.8	8.2	34.9	19.4	57.5	42.1	80.2	64.7	/	/	/	/	/	/	48.1	32.7
	8	/	/	31.3	12.6	52.9	35.2	75.5	57.9	98.1	80.5	120.7	103	/	/	55	37.3
	9	/	/	/	/	48.2	28.4	709	51	93.5	73.6	116	96.1	/	/	61.9	42
	10	/	/	/	/	43.6	21.5	66.2	44.1	88.8	66.7	111.3	89.2	134	111.8	68.7	46.7
	11	/	/	/	/	/	/	61.5	37.2	84.1	59.9	106.6	82.4	129.2	105	75.6	51.4
	12	/		/	/	/	/	56.8	30.4	79.4	53	101.9	75.5	124.5	98.1	82.5	56
HPA105SR	5	51	33.4	67.5	49.9	100.6	83	/	/	/	/	/	/	124.5	/	49.2	31.6
	6	44.7	23.5	61.1	40	94.2	73.2	127.3	106.2	/	/	/	/	/	/	59.1	38
	7	38.4	13.7	54.9	30.3	87.9	63.4	121	96.4	/	/	/	/	/	/	68.9	44.3
	8	/	/	48.5	20.4	81.6	53.5	114.7	86.5	147.7	119.6	180.8	152.7	/	/	78.7	50.6
	9	/	/	/	/	75.3	43.7	108.4	76.8	141.5	109.8	174.5	142.9	/	/	88.6	56.9
	10	/	/	/	/	68.9	33.4	102	66.5	135.1	99.6	168.2	132.6	201.2	165.7	98.4	63.3
	11	/	/	/	/	/	/	95.7	57	127.7	90.1	161.8	123.1	194.8	156.2	108.3	69.6
	12	/		/	/	/	/	89.4	47.5	122.5	80.6	155.5	113.6	188.6	146.7	118.1	75.9
HPA125SR	5	73	47	98	72	148	122	/	/	/	/	/	/	/	/	79	52
	6	63	31	88	56	138	107	188	157	/	/	/	/	/	/	94	63
	7	52	15	77	40	127	90	178	141	/	/	/	/	/	/	110	73
	8	/	/	67	25	117	75	167	125	217	176	268	226	/	/	125	84
	9	/	/	/	/	107	59	157	109	207	159	257	210	/	/	141	94
	10	/	/	/	/	96	44	146	94	196	144	247	194	297	245	157	105
	11	/	/	/	/	/	/	136	78	186	128	236	178	286	228	173	115
	12	/	/		/	/	/	125	63	176	113	226	163	276	213	188	125
HPA140SR	5	128	85	171	127	256	213	/	/	/	/	/	/	/	/	129	86
	6	111	59	154	102	239	187	325	273	/	/	/	/	/	/	155	103
	7	94	33	137	76	222	162	308	247	/	/	/	/	/	/	181	120
	8	/	/	120	50	205	136	291	221	376	307	462	392	/	/	206	137
	9	/	/	/	/	187	110	273	196	358	281	444	367	/	/	232	155
	10	/	/	/	/	170	84	256	169	341	255	427	340	512	426	258	172
	11	/	/	/	/	/	/	238	143	324	229	409	314	495	400	284	189
	12	/	/	/	/	/	/	221	118	307	203	392	289	478	374	310	206

Copyright owership belongs to HEARKEN® FLOW CONTROL shall not be reproduced,copied,or used in other ways without permission otherwise we will have the right to pursue legal responsibilities.
As we are continually developing our products,their design is subect to change without notice, Latest information is available on info@hearkenflow.com

Output torque of air springs																Spring's output	
Air pressure		2.5BAR		3BAR		4BAR		5BAR		6BAR		7BAR		8BAR			
Model	Spring Qty.	0°	90°	0°	90°	0°	90°	0°	90°	0°	90°	0°	90°	0°	90°	90°	0°
		Start	End	Start	End	Start	End	Start	End	Start	End	Start	End	Start	End	Start	End
HPA160SR	5	193	124	259	191	392	324	/	/	/	/	/	/	/	/	208	140
	6	165	83	232	149	365	282	498	415	/	/	/	/	/	/	250	168
	7	137	41	203	107	336	240	469	373	/	/	/	/	/	/	292	196
	8	/	/	176	66	309	199	442	237	575	465	708	598	/	/	333	223
	9	/	/	/	/	280	157	413	290	546	423	679	556	/	/	375	251
	10	/	/	/	/	253	115	386	248	519	381	652	514	785	647	417	279
	11	/	/	/	/	/	/	358	207	491	340	624	473	757	606	458	307
	12	/	/	/	/	/	/	330	165	463	298	596	431	729	564	500	335
HPA190SR	5	332	222	438	329	651	542	/	/	/	/	/	/	/	/	309	200
	6	292	161	398	267	611	480	824	693	/	/	/	/	/	/	371	240
	7	252	99	358	205	571	418	784	631	/	/	/	/	/	/	433	280
	8	/	/	318	143	531	356	744	569	957	782	1169	995	/	/	495	320
	9	/	/	/	/	491	295	704	507	917	720	1130	933	/	/	557	360
	10	/	/	/	/	451	233	664	446	877	658	1090	871	1302	1084	618	400
	11	/	/	/	/	/	/	624	384	837	597	1050	809	1263	1022	680	440
	12	/	/	/	/	/	/	584	322	797	535	1010	748	1223	960	742	480
HPA210SR	5	390	285	523	418	789	684	/	/	/	/	/	/	/	/	380	275
	6	335	209	468	342	734	608	1000	874	/	/	/	/	/	/	456	385
	7	280	133	413	266	679	532	945	798	/	/	/	/	/	/	532	385
	8	/	/	358	190	624	456	890	722	1156	988	1422	1254	/	/	608	440
	9	/	/	/	/	569	380	835	646	1101	912	1367	1178	/	/	684	495
	10	/	/	/	/	514	304	780	570	1046	836	1312	1102	1578	1368	760	550
	11	/	/	/	/	/	/	725	494	991	760	1257	1026	1523	1292	836	605
	12	/	/	/	/	/	/	670	418	936	684	1202	950	1468	1216	912	660
HPA240SR	5	552	409	744	600	1129	985	/	/	/	/	/	/	/	/	554	410
	6	470	297	662	489	1047	874	1432	1259	/	/	/	/	/	/	665	492
	7	388	187	580	379	964	764	1349	1149	/	/	/	/	/	/	775	575
	8	/	/	498	268	883	653	1267	1037	1652	1422	2037	1807	/	/	886	656
	9	/	/	/	/	800	542	1185	926	1569	1311	1954	1696	/	/	998	739
	10	/	/	/	/	718	431	1103	816	1488	1201	1874	1586	2257	1970	1108	903
	11	/	/	/	/	/	/	1021	705	1406	1090	1791	1474	2176	1859	1219	903
	12	/	/	/	/	/	/	939	594	1323	979	1708	1363	2093	1748	1330	985
HPA270SR	5	903	675	1195	968	1779	1552	/	/	/	/	/	/	/	/	787	560
	6	790	519	1083	811	1667	1396	2252	1984	/	/	/	/	/	/	943	672
	7	679	361	972	654	1556	1238	2141	1823	/	/	/	/	/	/	1101	783
	8	/	/	860	497	1444	1081	2029	1666	2614	2252	3199	2836	/	/	1258	895
	9	/	/	/	/	1332	923	1917	1509	2502	2094	3087	2678	/	/	1416	1007
	10	/	/	/	/	1220	767	1805	1352	2390	1937	2974	2521	3560	3107	1572	1119
	11	/	/	/	/	/	/	1693	1194	2278	1779	2862	2364	3448	2949	1730	1231
	12	/	/	/	/	/	/	1582	1037	2167	1623	2751	2207	3336	2792	1887	1342
HPA300SR	5	1097	729	/	/	/	/	/	/	/	/	/	/	/	/	1061	730
	6	935	494	1316	875	/	/	/	/	/	/	/	/	/	/	1273	876
	7	772	258	1153	639	1916	1402	/	/	/	/	/	/	/	/	1485	1022
	8	/	/	991	403	1754	1166	2517	1929	/	/	/	/	/	/	1697	1168
	9	/	/	/	/	1592	930	2355	1693	3118	2456	/	/	/	/	1909	1314
	10	/	/	/	/	1430	695	2193	1458	2956	2221	3719	2984	4482	3747	2122	1460
	11	/	/	/	/	/	/	2030	1222	2793	1985	3556	2748	4319	3511	2334	1606
	12	/	/	/	/	/	/	1868	986	2631	1749	3394	2512	4157	3275	2546	1752
HPA350SR	5	1553	964	/	/	/	/	/	/	/	/	/	/	/	/	1702	1173
	6	1292	586	1863	1157	/	/	/	/	/	/	/	/	/	/	2043	1408
	7	1031	208	1602	779	2745	1922	/	/	/	/	/	/	/	/	2383	1642
	8	/	/	1341	401	2484	1544	3626	2686	/	/	/	/	/	/	2724	1877
	9	/	/	/	/	2224	1165	3336	2307	4508	3449	/	/	/	/	3064	212
	10	/	/	/	/	1963	787	3105	1929	4247	3071	5390	4214	6532	5356	3405	2346
	11	/	/	/	/	/	/	2844	1551	3986	2693	5129	336	6271	4978	3745	2581
	12	/	/	/	/	/	/	2584	1172	3726	2314	4869	3457	6011	4599	4086	2816
HPA400SR	7	2028	869	/	/	/	/	/	/	/	/	/	/	/	/	2880	1837
	8	1736	411	2550	1225	/	/	/	/	/	/	/	/	/	/	3292	2100
	9	/	/	2259	768	3887	2396	/	/	/	/	/	/	/	/	3703	2362
	10	/	/	1967	311	3595	1939	5223	3567	/	/	/	/	/	/	4115	2624
	11	/	/	/	/	3303	1482	4931	3110	6559	4738	/	/	/	/	4526	2887
	12	/	/	/	/	3012	1025	4640	2653	6268	4281	7895	5908	9523	7536	4938	3149
	13	/	/	/	/	/	/	4348	2195	5976	3823	7603	5450	9231	7078	5349	3412
	14	/	/	/	/	/	/	4057	1738	5685	3366	7312	4993	8940	6621	5761	3674
	15	/	/	/	/	/	/	3765	1281	5393	2909	7020	4536	8648	6164	6172	3937
	16	/	/	/	/	/	/	/	/	5101	2452	6728	4078	8356	5707	6584	4199

Copyright owership belongs to HEARKEN® FLOW CONTROL shall not be reproduced,copied,or used in other ways without permission otherwise we will have the right to pursue legal responsibilities.
As we are continually developing our products,their design is subect to change without notice, Latest information is available on info@hearkenflow.com www.hearkenflow.com www.hfvalveactuator.com

Basic Actuator Outline Dimension(Unit:mm

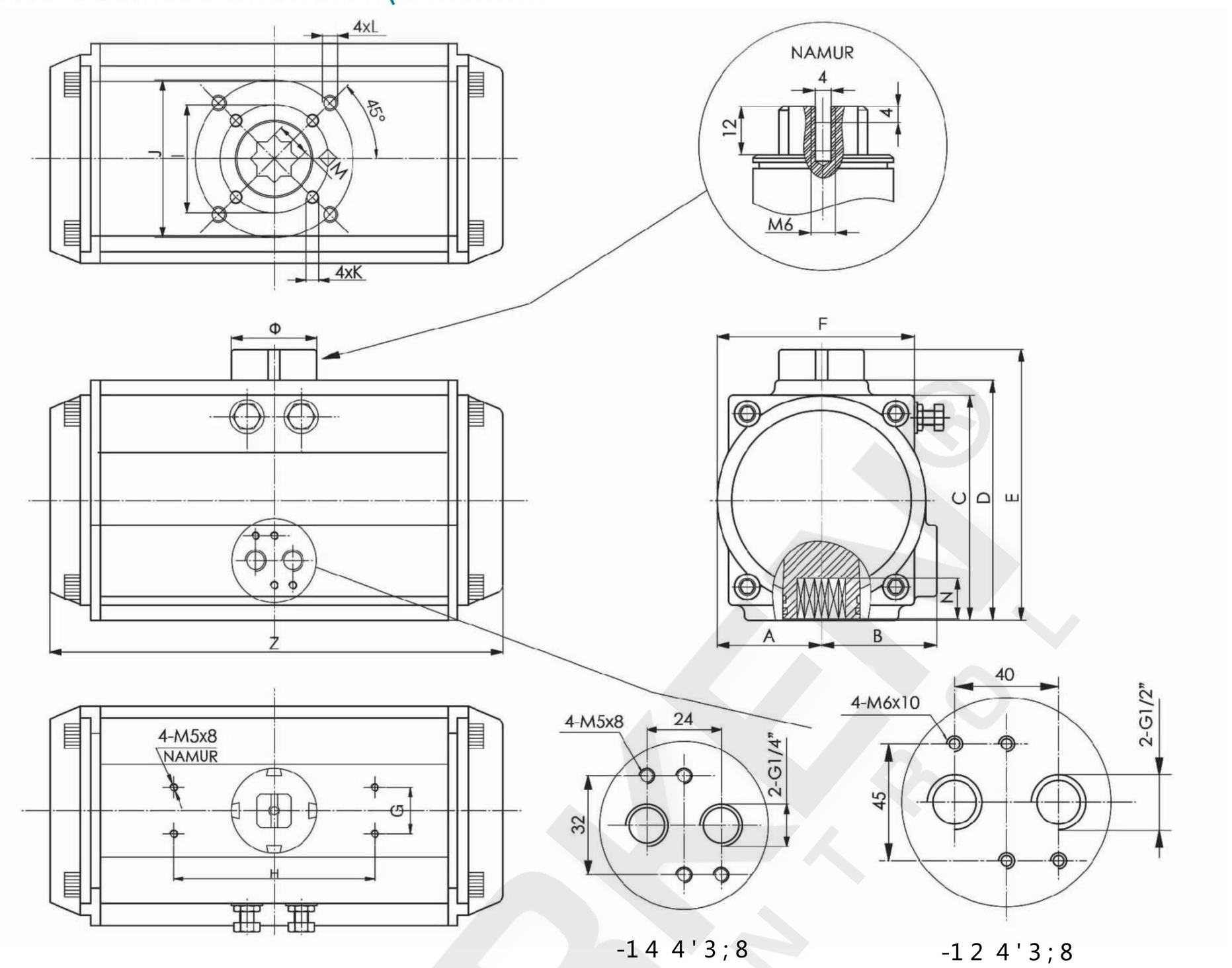

Model	A	B	C	D	E	F	G	H	I	J	K	L	M	N	Z	Φ	Air Connection	Flange Size
DA/SR-032	23	23	46	46	66	46	25	50		Φ36		M5x8	9	11	110	Φ40	NAMUR G1/4"	F03/F05
DA/SR-040	28.5	36.5	60	60	80	52	30	80	Φ36	Φ50	M5x8	M6x10	11	14	122	Φ40	NAMUR G1/4"	F03/F05
DA/SR-052	30	41.5	65.5	72	92	65	30	80	Φ36	Φ50	M5x8	M6x10	11	14	147	Φ40	NAMUR G1/4"	F03/F05
DA/SR-063	36	47	81	88	108	72	30	80	Φ50	Φ70	M6x10	M8x13	14	18	168	Φ40	NAMUR G1/4"	F05/F07
DA/SR-075	42	53	94	99.5	119.5	81	30	80	Φ50	Φ70	M6x10	M8x13	14	18	184	Φ40	NAMUR G1/4"	F05/F07
DA/SR-083	46	57	98.5	108.7	128.7	92	30	80	Φ50	Φ70	M6x10	M8x13	17	21	204	Φ40	NAMUR G1/4"	F05/F07
DA/SR-092	50	58.5	111	116.5	136.5	98	30	80	Φ50	Φ70	M6x10	M8x13	17	21	262	Φ40	NAMUR G1/4"	F05/F07
DA/SR-105	57.5	64	122.5	133	153	109.5	30	80	Φ70	Φ102	M8x13	M10x16	22	26	268	Φ40	NAMUR G1/4"	F07/F10
DA/SR-125	67.5	74.5	145.5	155	185	127.5	30	130	Φ70	Φ102	M8x13	M10x16	22	26	301	Φ55	NAMUR G1/4"	F07/F10
DA/SR-140	75	77	161	172	202	137.5	30	130	Φ102	Φ125	M10x16	M12x20	27	31	390	Φ55	NAMUR G1/4"	F10/F12
DA/SR-160	87	87	184	197	227	159	30	130	Φ102	Φ125	M10x16	M12x20	27	31	458	Φ55	NAMUR G1/4"	F10/F12
DA/SR-190	103	103	215	230	260	189	30	130		Φ140		M16x25	36	40	525	Φ80	NAMUR G1/4"	F14
DA/SR-210	113	113	235.5	255	285	210	30	130		Φ140		M16x25	36	40	532	Φ80	NAMUR G1/4"	F14
DA/SR-240	130	130	264.5	289	319	245	30	130		Φ165		M20x25	46	50	602	Φ80	NAMUR G1/4"	F16
DA/SR-270	147	147	299	326	356	273	30	130		Φ165		M20x25	46	50	718	Φ80	NAMUR G1/2"	F16
DA/SR-300	162	174	330	350	380	312	30	130		Φ165		M20x25	46	50	760	Φ80	NAMUR G1/2"	F16
DA/SR-350	190	195	483	410	440	365	30	130	Φ165	Φ254	M20x25	8xM16x25	46	50	920	Φ80	NAMUR G1/2"	F16/F25
DA/SR-400	260	260	466	466	496	298	30	130	Φ165	Φ254	M20x25	8xM16x25	46	50	940	Φ80	NAMUR G1/2"	F16/F25

Copyright owership belongs to HEARKEN® FLOW CONTROL shall not be reproduced,copied,or used in other ways without permission otherwise we will have the right to pursue legal responsibilities.
As we are continually developing our products,their design is subect to change without notice, Latest information is available on info@hearkenflow.com www.hearkenflow.com www.hfvalveactuator.com
Rev. April 01, 2021